GETTING TO KNOW YOUR MIDIPOND FILTER

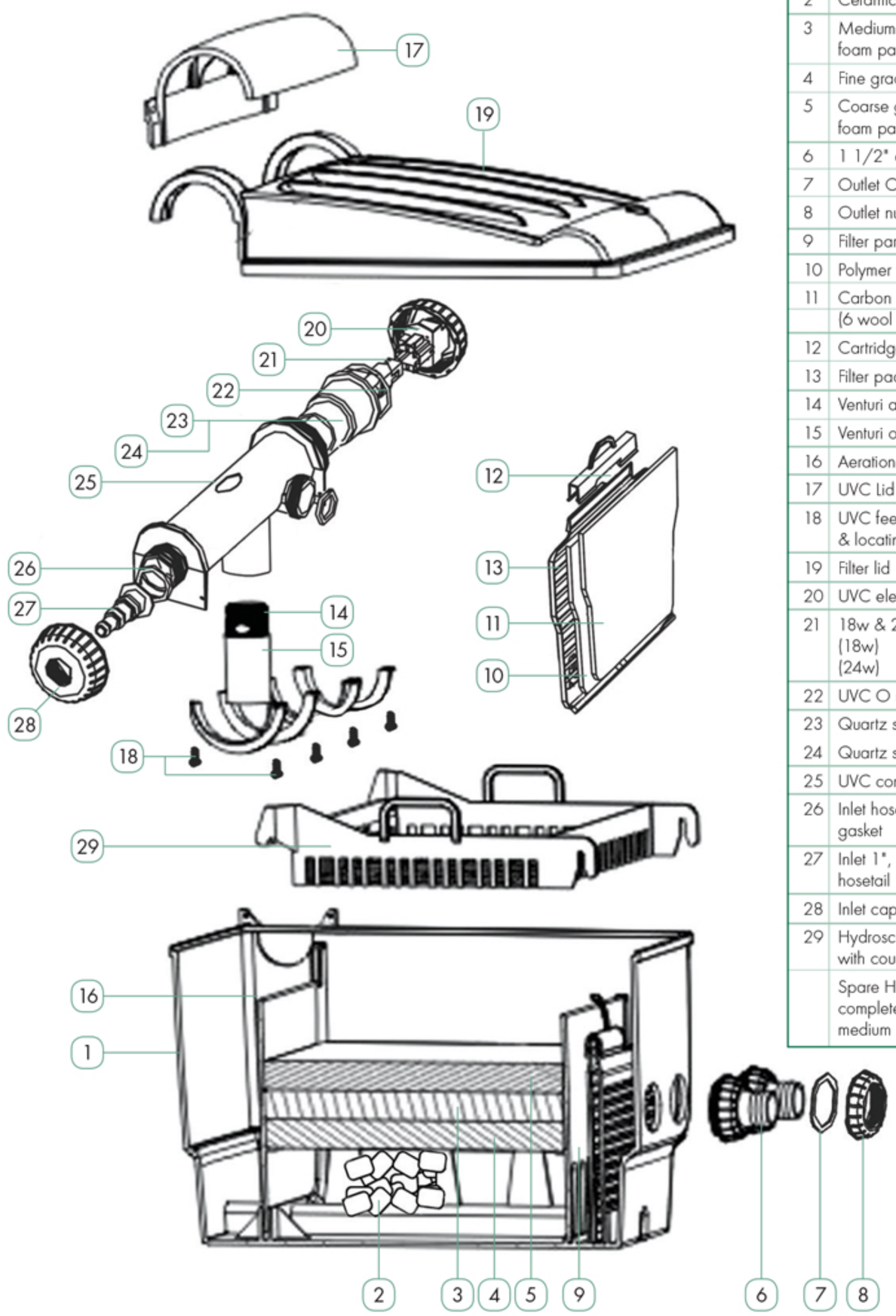

	Part Description	Spare Code
1	Filter body	N/A
2	Ceramic biomedia	1012430
3	Medium grade foam pad	
4	Fine grade foam pad	1060004
5	Coarse grade foam pad	
6	1 1/2" outlet hose tail	
7	Outlet O ring gasket	1040600
8	Outlet nut	
9	Filter partition divider	N/A
10	Polymer wool pad	
11	Carbon foam pad (6 wool & 6 carbon)	1060011
12	Cartridge clip	
13	Filter pad cartridge	1060028
14	Venturi adjuster	N/A
15	Venturi outlet	N/A
16	Aeration Partition	N/A
17	UVC Lid	N/A
18	UVC feet/hinge & locating screws x8	N/A
19	Filter lid	N/A
20	UVC electronics & cap	N/A
21	18w & 24w UVC lamp (18w) (24w)	1050128 1050111
22	UVC O ring gasket	N/A
23	Quartz sleeve 18w	1060035
24	Quartz sleeve 24w	1060042
25	UVC contact chamber	N/A
26	Inlet hose tail O ring gasket	N/A
27	Inlet 1", 11/4", 11/2" hosetail	N/A
28	Inlet cap	N/A
29	Hydroscreen complete with course sieve	
	Spare Hydroscreen complete with fine, medium & course sieve	1060059